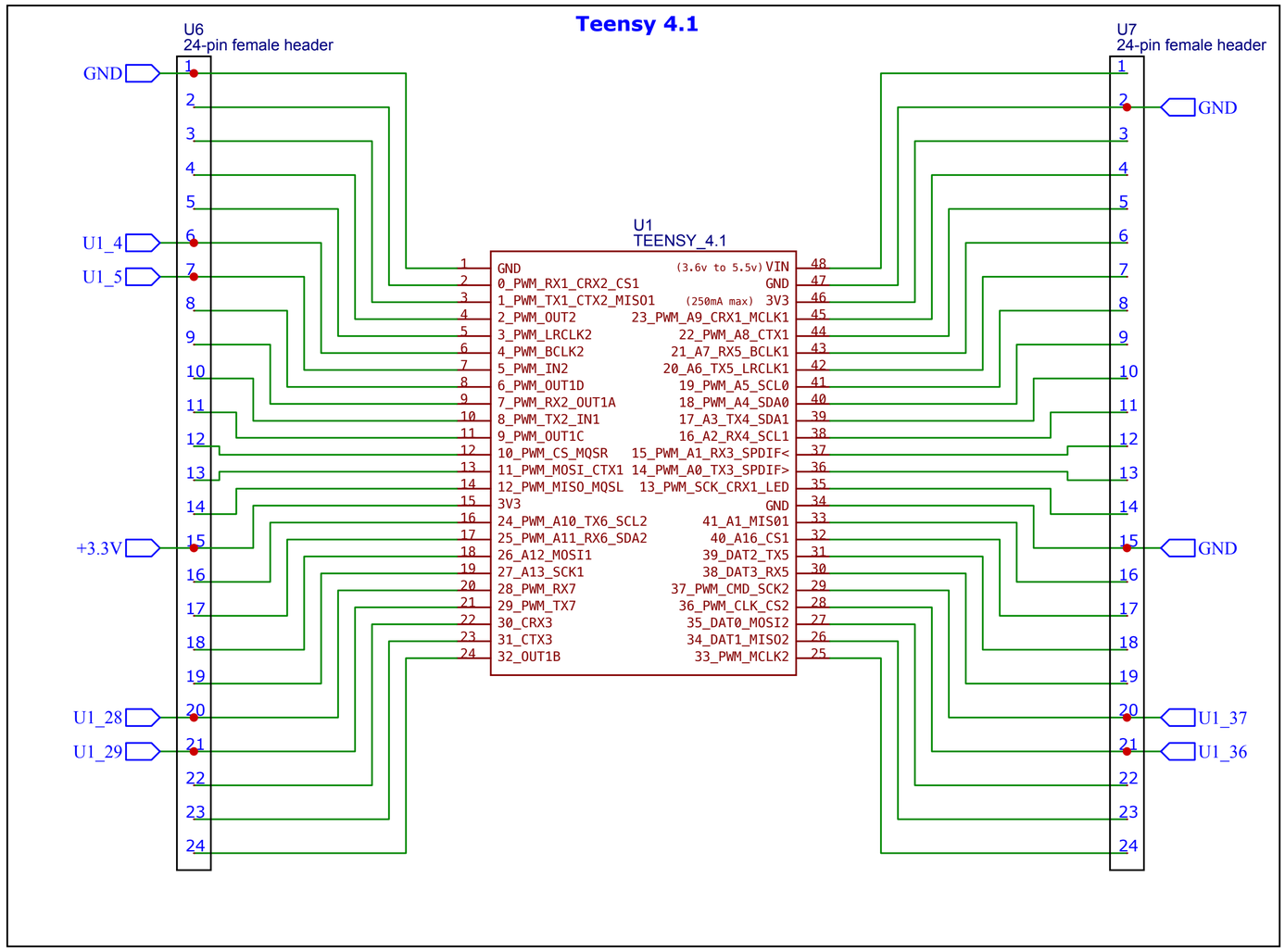

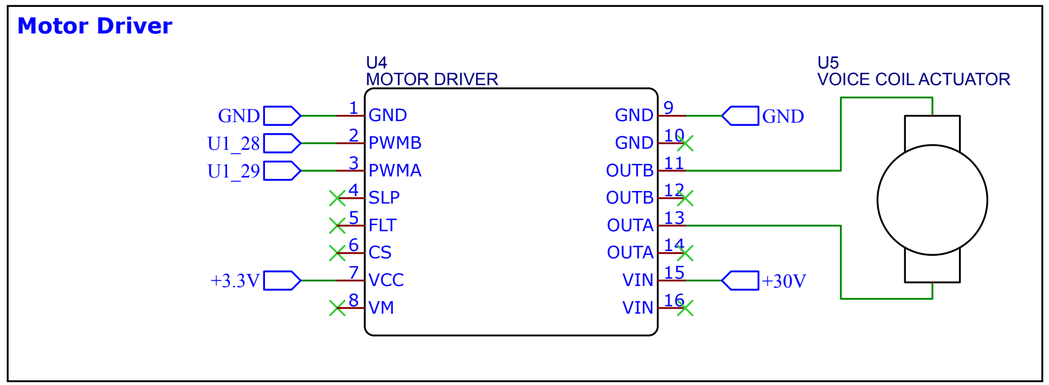

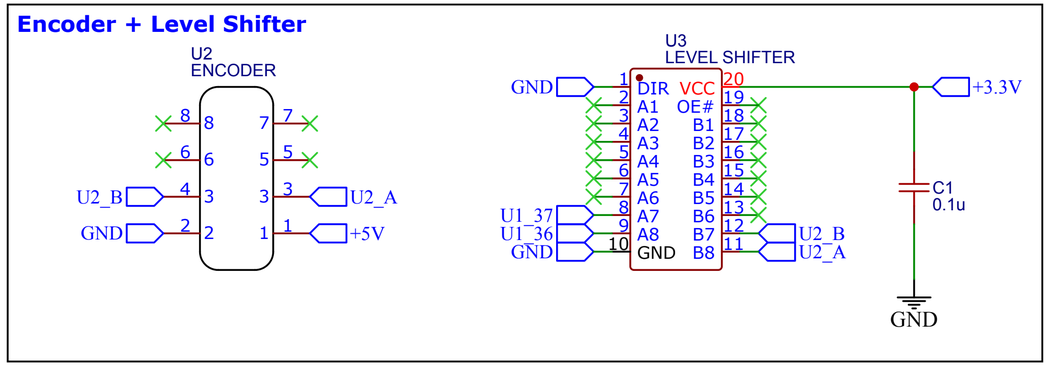

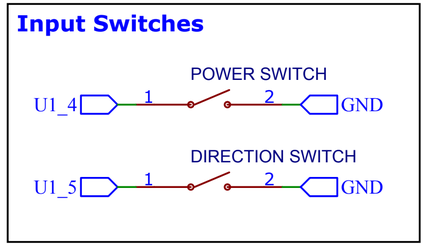

NOTES:

→ Supply voltage was 30V

→ Encoder uses 5V logic so a 5V to 3.3V level shifter is needed

→ It is highly recommended to use the SLP pin on the motor driver (use with 10k pulldown)

TITLE: Schematic for Vibrating Spatula		REV: 1.0
EasyEDA	Company: Salisbury Robotics Lab	Sheet: 1/1
	Date: Dec. 17th, 2025 Drawn By: Connor Yako	