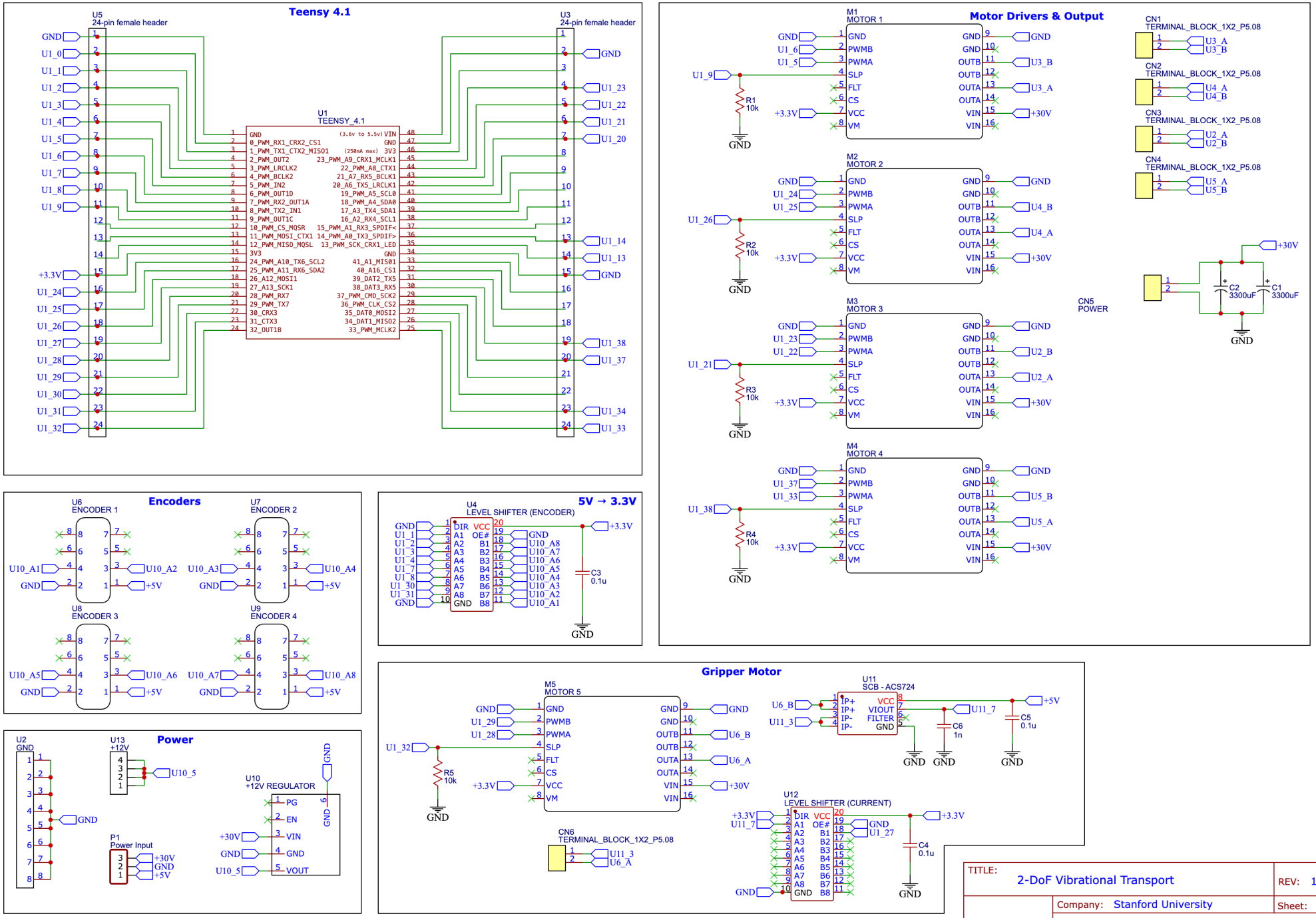
Teensy 4.1
U5
24-pin female header
U3
24-pin female header
U1
TEENSY_4.1
Motor Drivers & Output
M1
MOTOR 1
M2
MOTOR 2
M3
MOTOR 3
M4
MOTOR 4
CN1
TERMINAL_BLOCK_1X2_P5.08
CN2
TERMINAL_BLOCK_1X2_P5.08
CN3
TERMINAL_BLOCK_1X2_P5.08
CN4
TERMINAL_BLOCK_1X2_P5.08
CN5
POWER
C1
3300uF
C2
3300uF
Encoders
U6
ENCODER 1
U7
ENCODER 2
U8
ENCODER 3
U9
ENCODER 4
5V → 3.3V
U4
LEVEL SHIFTER (ENCODER)
C3
0.1u
Power
U2
GND
U13
+12V
U10
+12V REGULATOR
P1
Power Input
Gripper Motor
M5
MOTOR 5
U11
SCB - ACS724
C6
1n
C5
0.1u
U12
LEVEL SHIFTER (CURRENT)
C4
0.1u
CN6
TERMINAL_BLOCK_1X2_P5.08
TITLE:
2-DoF Vibrational Transport
REV: 1.0
Company: Stanford University
Sheet: 1/1
Date: ICRA 2026
Drawn By: Connor Yako